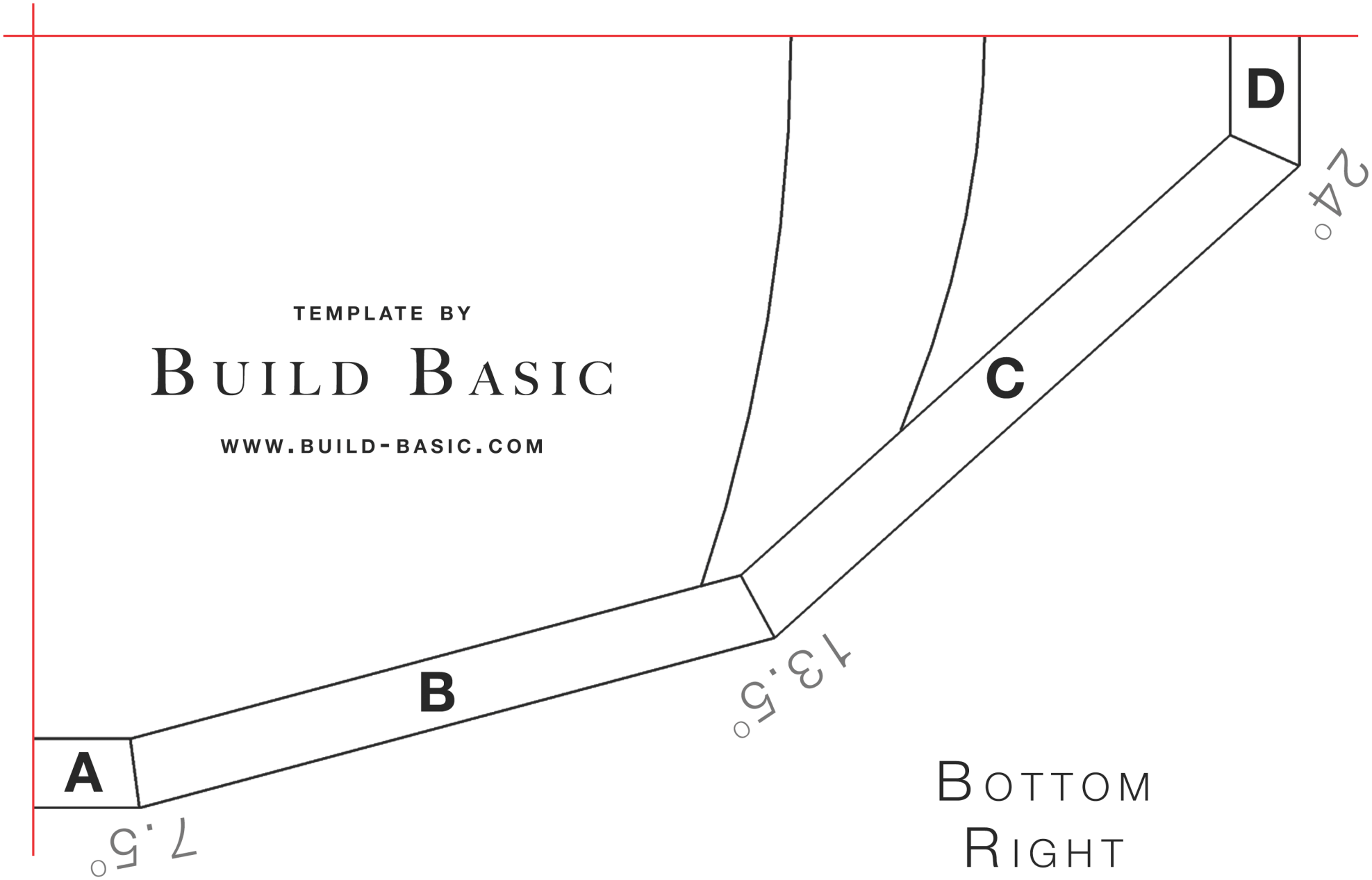

BOTTOM RIGHT

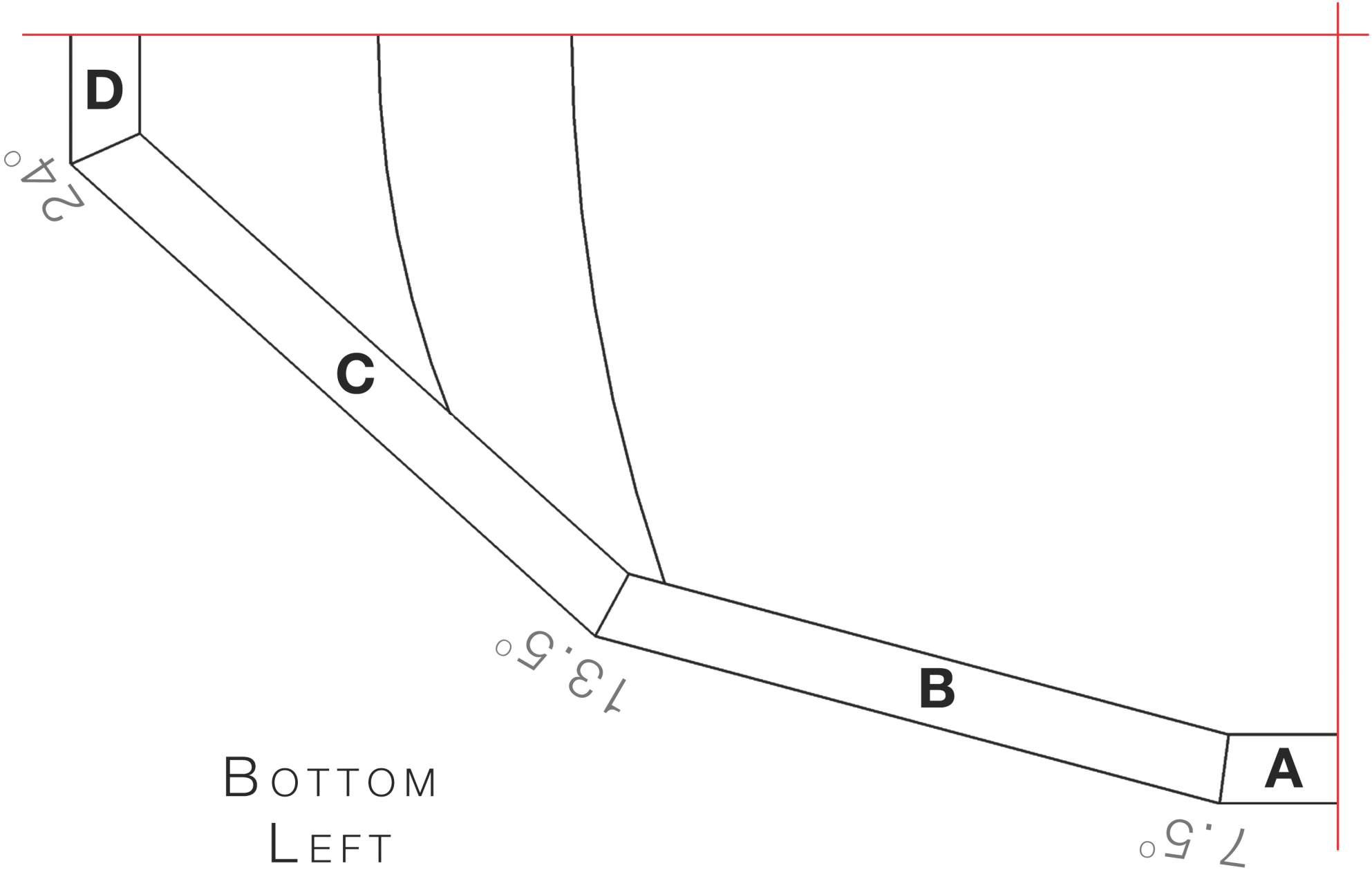

Bottom
Left

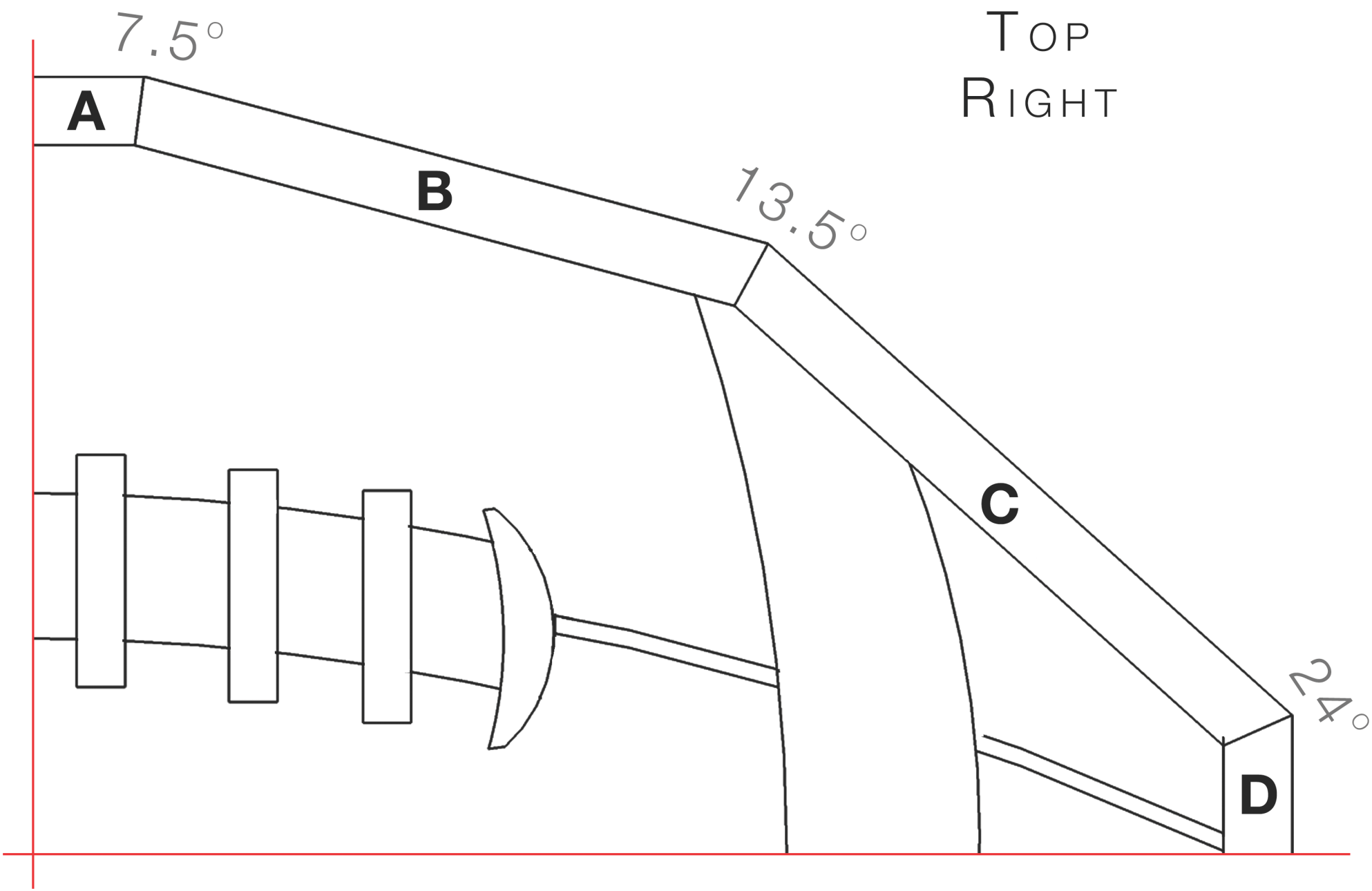

Top
Right

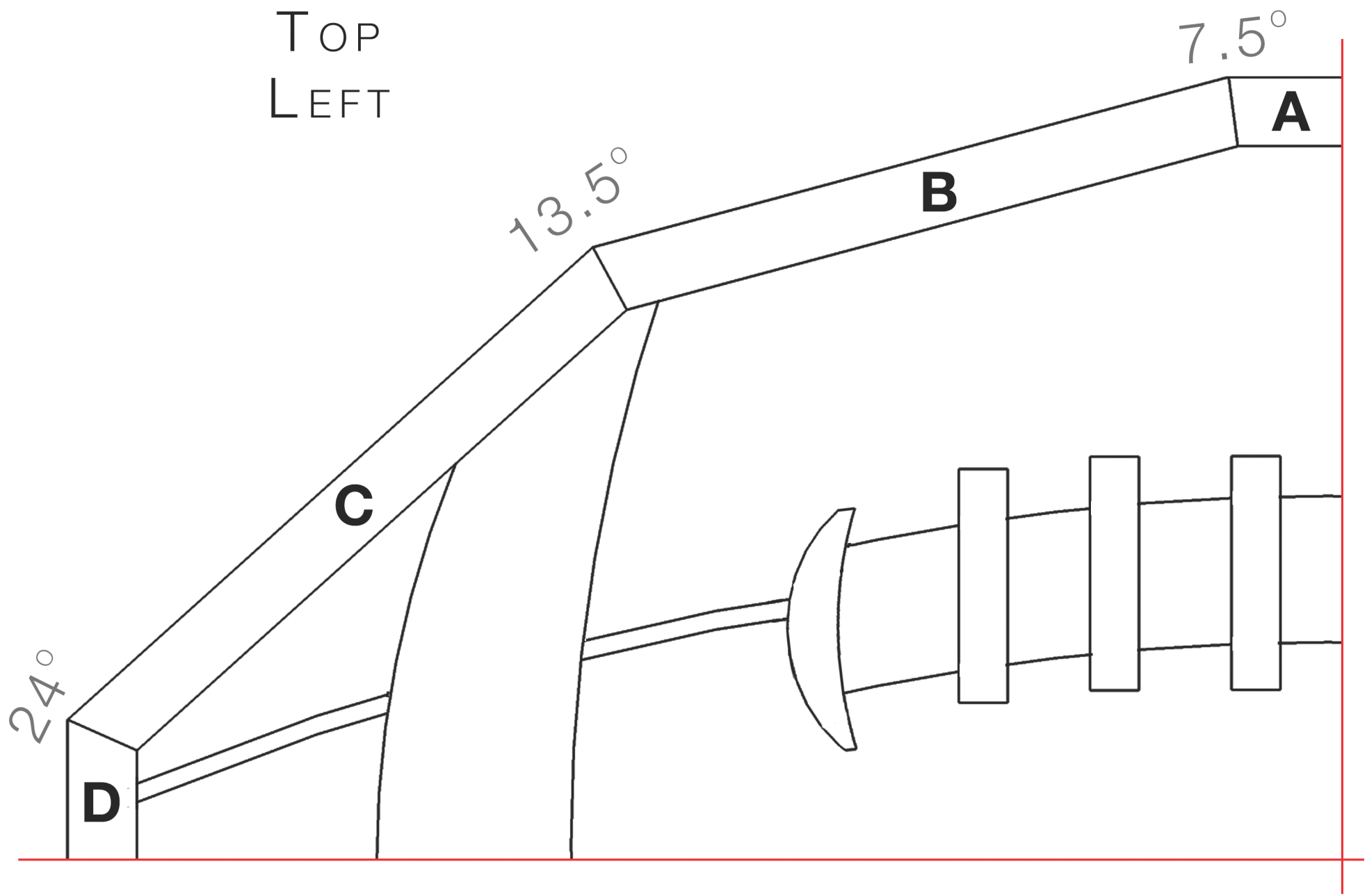
TOP
LEFT
7.5°
A
B
13.5°
C
24°
D